# INSTRUCTION MANUAL

# ILLUSTRATED PARTS LIST

FOR

# SINGER

MACHINES

2188D -33

THE SINGER COMPANY

From the library of: Superior Sewing Machine & Supply LLC

From the library of: Superior Sewing Machine & Supply LLC

# CONTENTS

## INSTRUCTIONS FOR OPERATION


A.Introduction ---- 4
B.Main technological specifications ---- 4
C.Machine installation and operation preparation ---- 4
1. Machine installation ---- 4
(1) Proper fitting ---- 4
(2) Fitting oil pan ---- 4
(3) Fitting machine head ---- 4
(4) Fitting thread winder ---- 5
(5) Fitting knee lifter ---- 5
(6) Sketch map of machine stand installation ---- 6
2. Operation preparation ---- 6
(1) Cleaning ---- 6
(2) Inspection ---- 6
(3) Lubrication ---- 7
(4) Testing ---- 7

D.Operation ---- 7
1. Selecting sewing thread ---- 7
2. Needle and thread ---- 7
3. Fitting needle ---- 7
4. Threading ---- 8
5. Winding bobbin ---- 8
6. Threading bobbin case ---- 8
7. Loading and unloading bobbin ---- 9
8. Regulate needle gauge and feeding ---- 9
9. Thread tension ---- 9
(1) Regulating take-up spring ---- 10
(2) Regulating thread tension ---- 10
10. Regulating presser pressure ---- 11
11. Regulating thread hook ---- 11

E.Regulating machine ---- 11
1. Loading and unloading rotary hook ---- 11
2. Adjustment of rotary hook looping timing ---- 12
3. Regulating feed dogs length ---- 12

F.Trouble due to incorrect use or adjustment of the machine ---- 14




From the library of: Superior Sewing Machine & Supply LLC

# PARTS BOOK

1. Arm components ---------- 16
2. Upper shaft. needle bar components ---------- 18
3. Presser lift components ---------- 20
4. Lower shaft, rotary hook components ---------- 22
5. Feeding, lifting bell components ---------- 24
6. Thread winder, thread stand components ---------- 26
7. Sewing plate, electrical equipment, components ---------- 28
8. Machine stand components ---------- 30



From the library of: Superior Sewing Machine & Supply LLC

# Instruction Manual

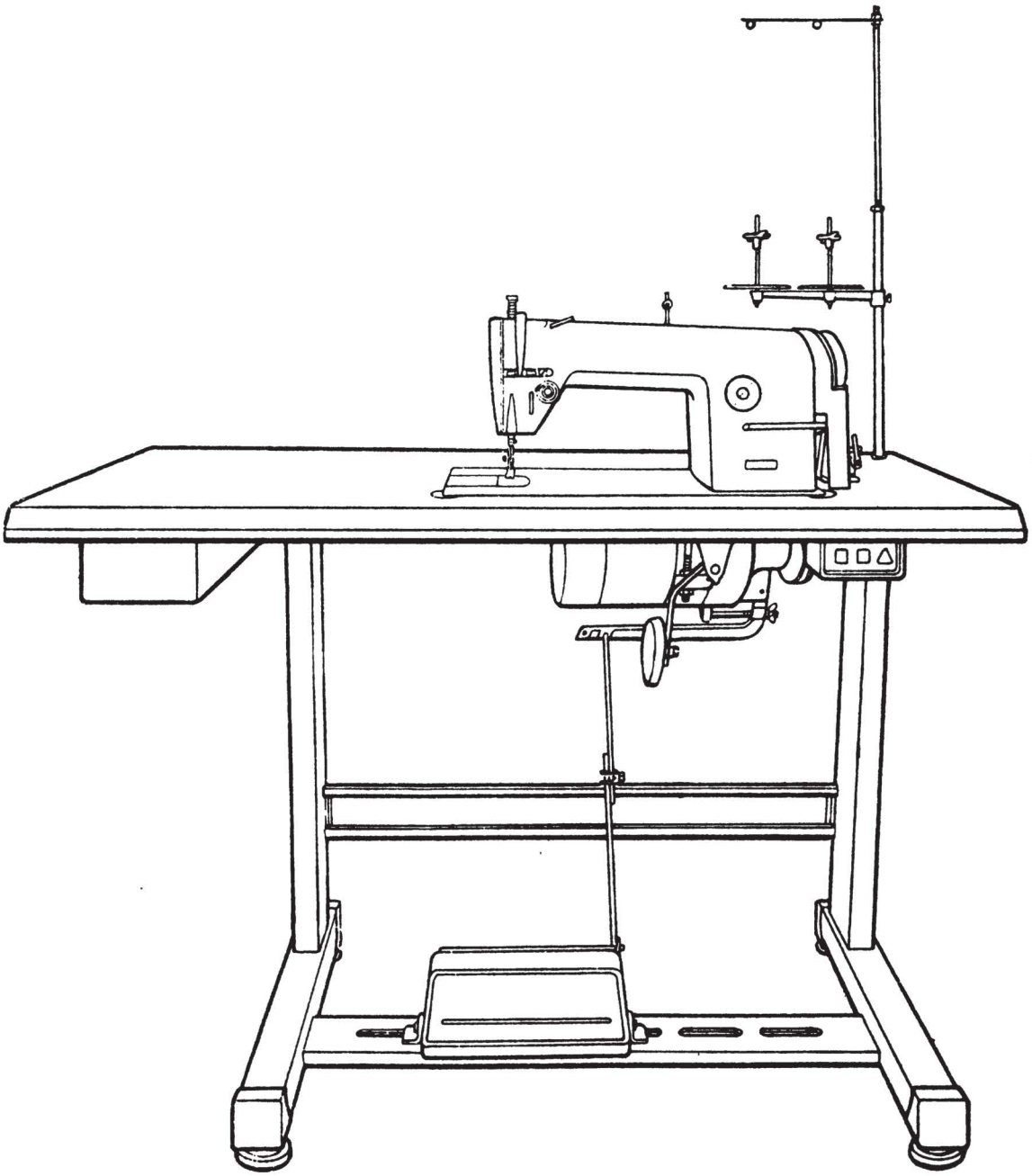



From the library of: Superior Sewing Machine & Supply LLC

## A.INTRODUCTION

The medium speed flat bed industrial sewing machine is single straight needle, double thread lockstitcher, which is suitable for sewing medium weight knitting, cotton, wool and artificial fibre or light leather etc. in knitting, shirt, underwear and garment factories.

The machine adopts link take up lever and forward & backward feed system with built-in presser lift, wipe equipment, trimmer and tape wheel cover; helical taper gear driven in upper and lower shaft system. The gear is sealed by aluminium die-casting cover, The main parts of the machine are made of high quality alloy steel. This results in its steady running, lower noise, easy operation, safety and durability.

## B.MAIN TECHNOLOGICAL SPECIFICATIONS

1. Maximum sewing speed: 3000 s.p.m.
2. Maximum needle gauge: 4mm
3. Presser lifting amount: 6mm (10mm by knee lifting)
4. Sewing ability of maximum thickness: 5mm (wool fabric)
5. Sewing thread: Left twist 42-100 cotton thread of silk, linen and nylon thread
6. Needles: N1515-01-#16
7. Working space from the right side of the needle bar: (L)260 × (H)130(mm)
8. Electrical motor power: 380V/370W
9. Oil:Singer oil type B.

## C.MACHINE INSTALLATION AND OPERATION PREPARATION

1. Machine installation:

(1) Proper Fitting:

The machine should be installed on a strong base to ensure the machine to have a steady running and minimum vibration at high speed. If the four rubber mats on the feet of the sewing machine stand have a good connection with ground, it results in lower noise in operation.

(2) Fitting oil pan:

In Fig. 2 put oil pan 2 into the frame of table, then set it with screw 3.

(3) Fitting machine head:

In Fig. 3, first put machine head link hook base 1 and machine head base mat 2 into the semi-hole of table, then hang the connecting hook 3 on hook base 1. Turn the machine head to make it sit in the middle of the fram of the table. It must be noticed that machine head should run actively.



From the library of: Superior Sewing Machine & Supply LLC

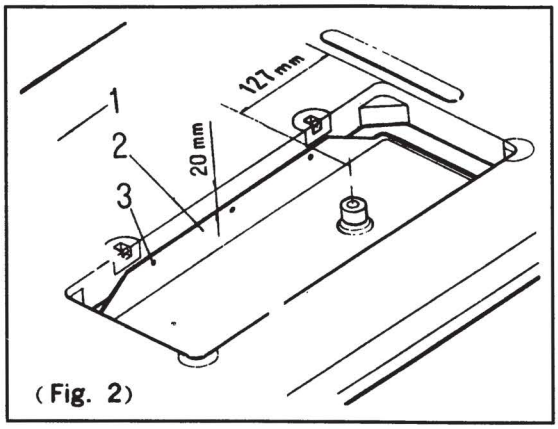

(Fig. 2)

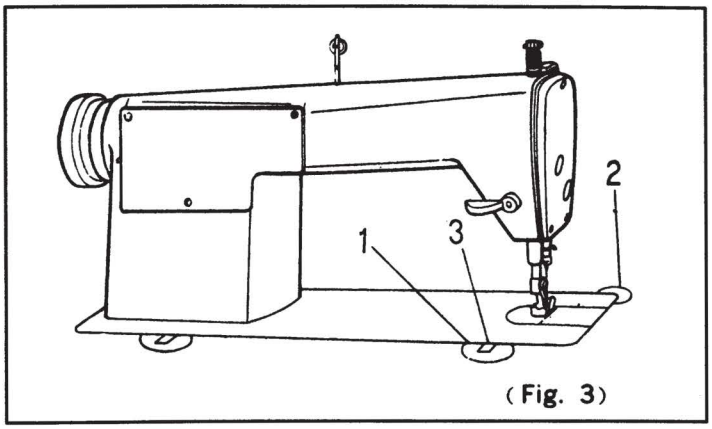

(Fig. 3)

(4) Fitting thread winder

After fitting machine head and belt, the thread winder can be fitted. In fig. 4 when fitting winder, the winder wheel 1 should face the outside of belt 2. Between winder wheel and belt should have a certain clearance. If push down winder wheel stand 3, the winder wheel should touch the belt, And when balance wheel running, the belt can make the winder wheel run together, Then tighten screw 4 to set the thread winder on the table.

(5) Fitting knee lifter

1) Shown in Fig. 5, first set the base 1 on the bottom of the table with screw 2, put the node of presser lift 3 and presser lift 8, crank 10, and spring 6 on the parts of knee lifter shaft 7, then put 7 into the hole of base 1, and put the another base 12 on the another end of the shaft, it must be noticed that the centre of two shaft holes of the two bases should be in perfect alignment so that the shaft can run actively. Then set the base 12 on the bottom of table with screw 13

2) Insert short end of presser operating lever 14 into another hole of presser lift node 3 and temporarily set it with screw 5, put screw 16 and nut 17 on the operating plate position stand, then together with operating plate 18 cover into long end of presser lift operating lever 14 and temporarily set it with screw 16. Finally fitting soft mat of operating plate 19 on the operating plate 18

3) Fit operating plate in proper position and tighten screw 11, at this time presser lift crank 10 should meet with oil pan top lever pin 21

4) Short end of spring 6 should be hooked on to shaft pin 20, and the long end on to base 12 so that the presser lift crank 10 separates from the oil pan top lever pin 21.

5) Push operating plate 18 to make the presser lift up to the highest position of 10 mm from needle plate, turn the node 8 to makes it meet the node of base, then tighten screw 9. Thus the size of Swinging angle of operating plate can be controlled, And when lifting the presser, it will not make noise

6) As per operator's height, regulate the position of operating plate 18, then set it with screw 4, 5 and 16..



From the library of: Superior Sewing Machine & Supply LLC

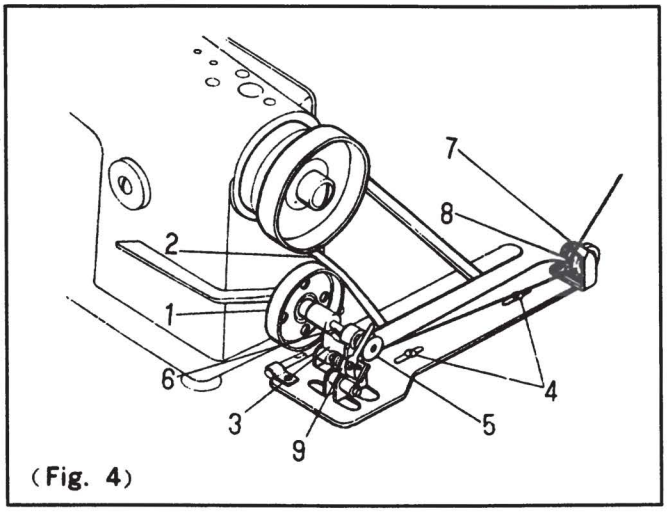

(Fig. 4)

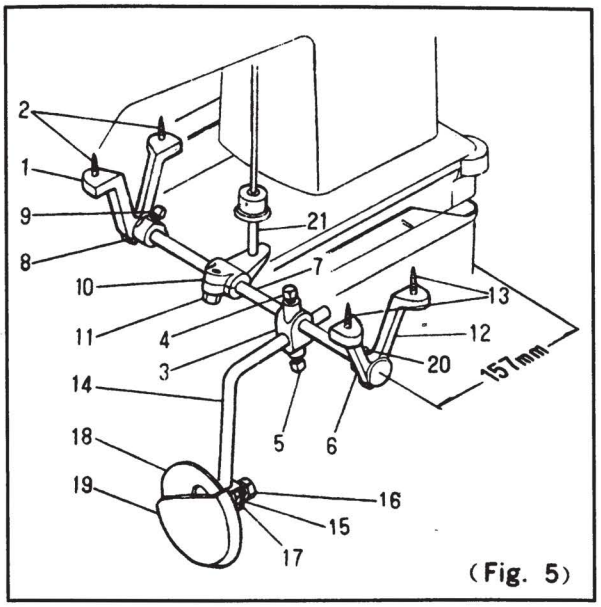

(Fig. 5)

(6) Sketch map of machine stand installation: (Fig. 6)

a. Position of machine stand.

b. Position of drawer.

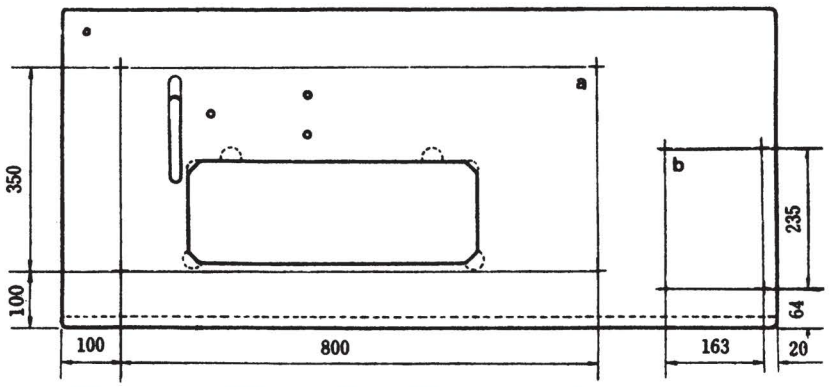

(Fig. 6)

2. Operation preparation:

(1) Cleaning:

Before packing each part of the machine, should be covered with anti-rust grease. And before operating new machine, anti-rust grease on each part of machine should be cleaned out with gasoline and clean soft cloth.

(2) Inspection:

Some parts of machine head may get loose due to vibration incurred in transit or rough handling, so after cleaning, the machine should be thoroughly inspected. To check the machine head by means of turning balance wheel. The machine head must be regulated in the case of condition such as abnormal noise from the compact of moving parts, the difficulty of the machine head to run, running into each other of moving parts.



From the library of: Superior Sewing Machine & Supply LLC

(3) Lubrication:

Before operating, every running part of the machine and oil tank should be filled with machine oil. Then operate it at lower speed for several minutes. It is necessary to fill oil at least twice a day. When to fill oil, make sure the oil is Singer oil type B.

(4) Testing:

1) When machine running, the balance wheel should be counterclock wise. (see right side)

2) The machine can not run without materials after threading.

3) At the beginning of operating, the speed of machine can over 2500 spm. Only after one or two months of running can the speed of the machine be increased as per nature of fabrics.

## D.OPERATION

1. Selecting sewing thread:

Needle thread should be left twisting (Fig.7)

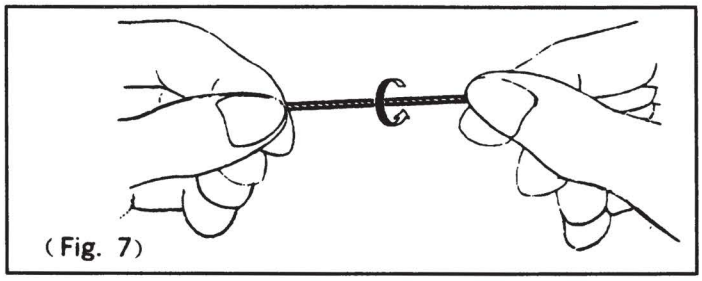

(Fig. 7)

2. Needle and thread:

The original needle on this machine is model Cat. 1515-01. If the needle is changed into model Cat. 1315-01, the needle bar should be regulated lower. The size of the needle is #9-#18.

| Needle size | Thread size | | | Materials to be sewn |
|---|---|---|---|---|
| | Cotton | Silk | Nylon | |
| # 9 | 100-120 | 30 | 3-56 | Light materials |
| #11 | 80-100 | 24-30 | | Light materials |
| #14 | 60-80 | 20 | | Medium materials |
| #16 | 40-60 | 16-18 | | Medium materials |
| #18 | 30-40 | 10-12 | | Heavy materials |

3. Fitting needle:

Turning balance wheel to make the needle bar in the highest position and loosen the screw 1 (Fig.8). Long groove of needle should face left of the operator. Insert the needle into the hole of the needle bar. Tighten the screw 1.



From the library of: Superior Sewing Machine & Supply LLC

4.Threading:

As per Fig. 9, when threading needle thread, first, put the thread through thread guide 1 and tension plate 2 and thread retainer 3, down through tensioner 4 and thread take up spring 5 and thread releasing hook 6. Then up through right thread hook 7 and thread take up lever 8. Again down through left thread hook 9 and needle bar sleeve thread hook 10 and needle bar thread hook 11, Finally pull the thread through needle hole 12 from left to right with thread tail 100 mm .

When threading bobbin thread, hold the needle thread while turning balance wheel to make the needle bar move down and then to make it rise in the highest position. Then the bobbin thread is pulled out with the needle thread. Finally put the two threads under the presser foot.

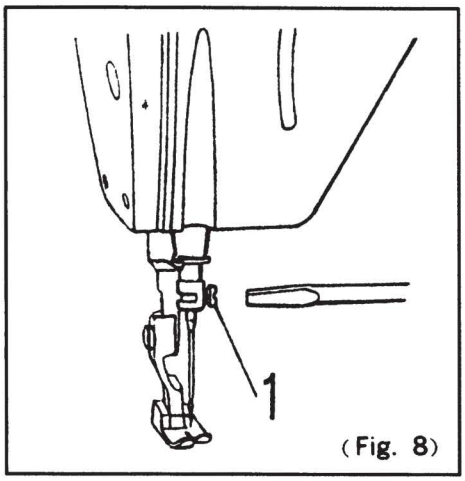

(Fig. 8)

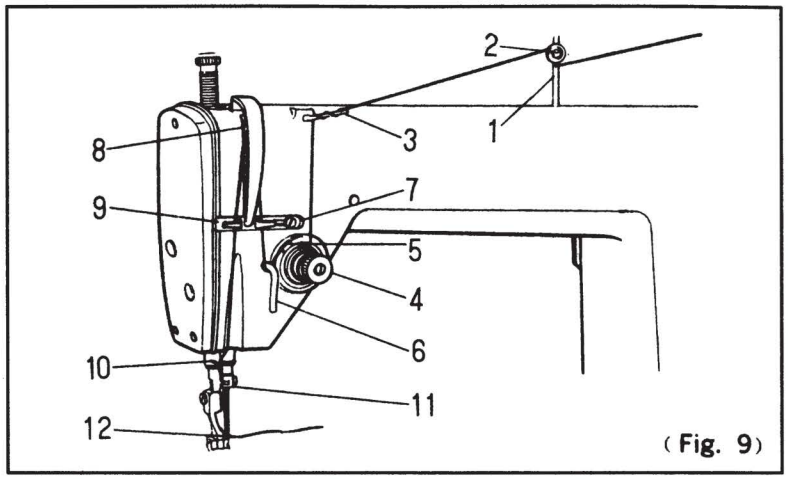

(Fig. 9)

5.Winding bobbin:

Insert bobbin 5 (Fig. 4) into the top of the winder shaft 6. Put the needle thread through hole of thread guide bracket 7 and insert it between two plates 8. Then the needle thread is winded several times on the bobbin. Pull down the full-thread plate 9, thus the winding wheel can press the tape. Then operate the machine, And the winder can work automatically. When the bobbin is full, the winder will stop automatically.

Increasing pressure on the tension plate 8 can regulate thread tension. Moving thread guide bracket 7 can regulate thread arrangement. In general, bobbin can not be winded overfull. Winding amount can be controlled by full-thread plate 9.

6.Threading bobbin case:

Put the full bobbin 1 (Fig. 10a) into the case 2;

Insert thread into slot 3 (Fig. 10b);

Through the spring 4, the thread is pulled out of the hole 5 about 100 mm.



From the library of: Superior Sewing Machine & Supply LLC

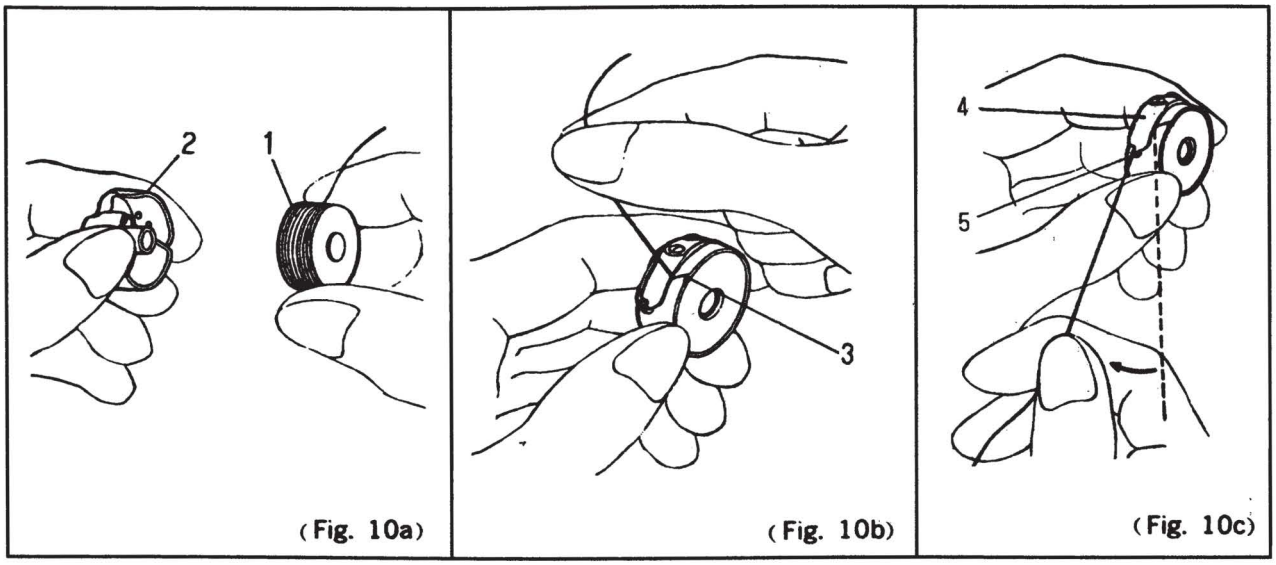

(Fig. 10a) (Fig. 10b) (Fig. 10c)

7.Loading and unloading bobbin:

Hold bobbin case lid 1 and insert bobbin case 2 into the shaft 3 of rotary hook (Fig.1 1), Turn the balance wheel and watch if the bobbin case is set.

When unloading bobbin case, turn balance wheel to raise the needle bar in the highest position. Then open the bobbin case lid and take out the bobbin case.

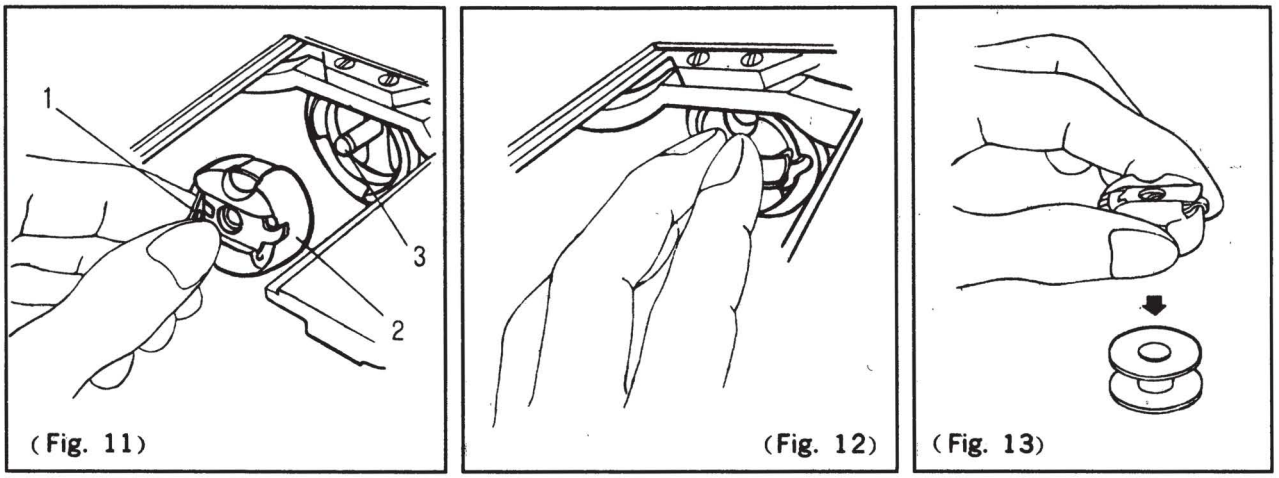

(Fig. 11) (Fig. 12) (Fig. 13)

8.Regulate needle gauge and feeding:

Turning the rotary button can regulate the width of needle gauge (Fig. 14). If turning counter clockwise, the needle gauge is wide. If turning clockwise, the needle gauge is narrow, If it is necessary to back tack, just put down the lever under the rotary button.

9.Thread tension:

Thread tension is changed as per sewing material and thread size. In Fig. 15. There are five stitches which often appear.

(a) Normal. Two threads lock in the middle of the material.

(b) Needle thread tension is too high. Two threads lock on the surface of the material.



From the library of: Superior Sewing Machine & Supply LLC

(c) Needle thread tension is too low. Two threads lock under the material.

(d) The two threads tension are both low. They are floating on the surface of the material.

(e) The two threads tension are both high. They are locking tightly in the material.

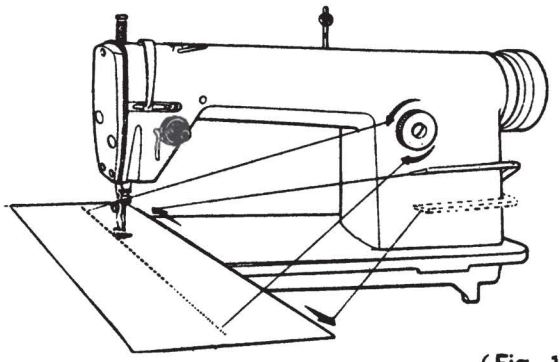

(Fig. 14)

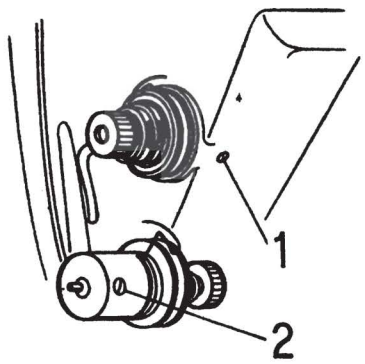


(Fig. 16)

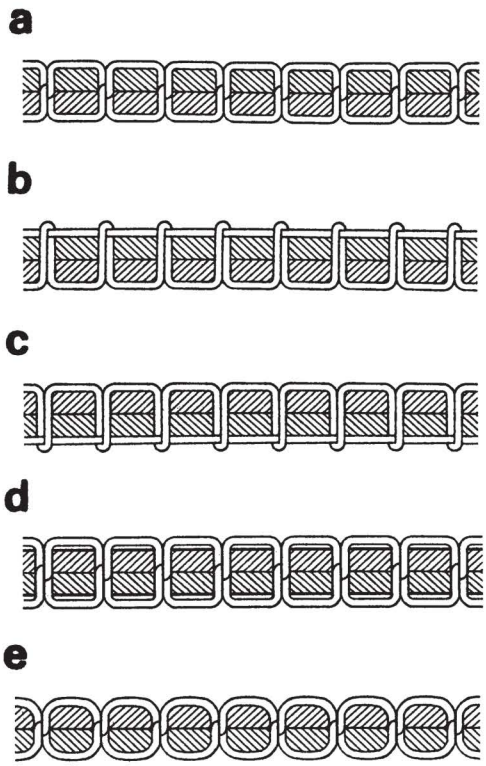


(Fig. 15)

(1) Regulating take up spring:

In general, the tension of take-up spring is 20g and the range of swinging is 7-10mm. When sewing special light material (narrow needle gauge), the tension should be reduced and the range should be broadened. Vice-versa for special heavy material.

When regulating the range of swinging, first loosen the set screw 1 (Fig. 16.) Then turn the tensioner to regulater the range of swinging. If turn the tensioner clockwise, the range is broadened. If turning counter clockwise, the range is narrowed, Then tighten the screw.

When regulating the tension of take up spring, first loosen set screw 1, and take out the tension. Then loosen set screw 2, so the tension screw can be turned. Turning clockwise can increase tension. Turning counter clockwise can reduce tension.

(2) Regulating thread tension:

The stitch on sewing material should in Fig 15 (a). If needle thread is too tight while bobbin thread is loose, the tension nut should turn counter clockwise to loosen the needle thread pressure and tighten the screw of bobbin spring to increase the bobbin thread pressure (Fig. 17). Vice versa in previous case (Fig. 18).



From the library of: Superior Sewing Machine & Supply LLC

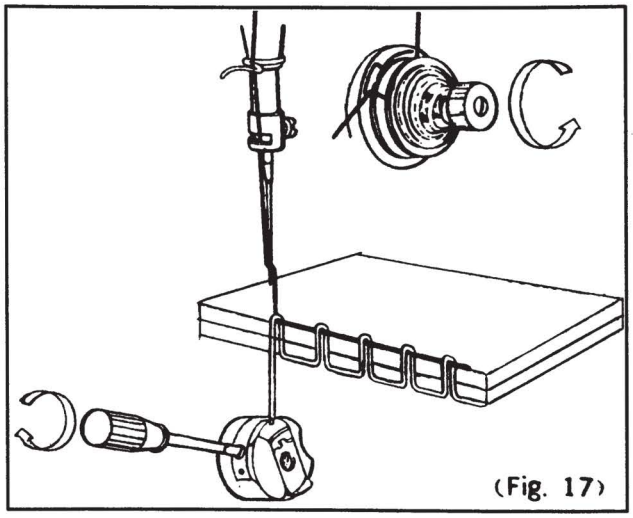
(Fig. 17)

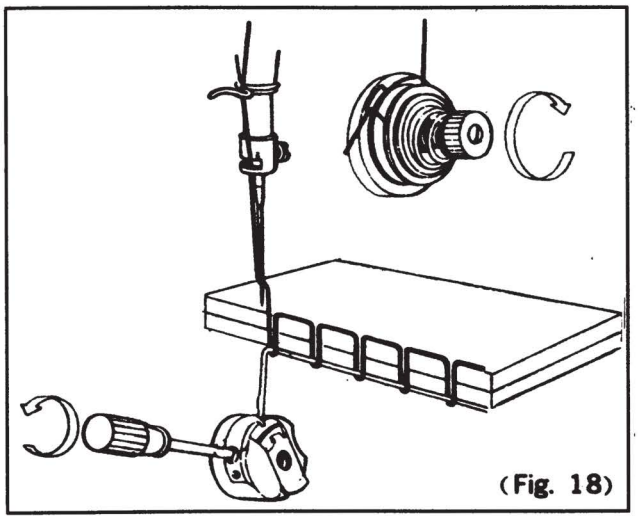
(Fig. 18)

10. Regulating Presser Pressure:

Presser pressure should be regulated as per sewing materials. When sewing heavy materials, the pressure should be increased. Just turn the screw on top of the machine head (Fig. 19) (heavy). Vice -versa when sewing light material (Fig. 19) (light).

Presser pressure should be properly regulated so that it can feed material without a hitch.

11. Regulating thread hook:

In order to make the stitches move beautifully, the position of thread hook should be regulated as per materials and the gauge of the needles.

When sewing heavy materials, first loosen the screw 2 (Fig. 20) and move the thread hook 1 to left to increase the thread amount. Vice-versa when sewing light materials.

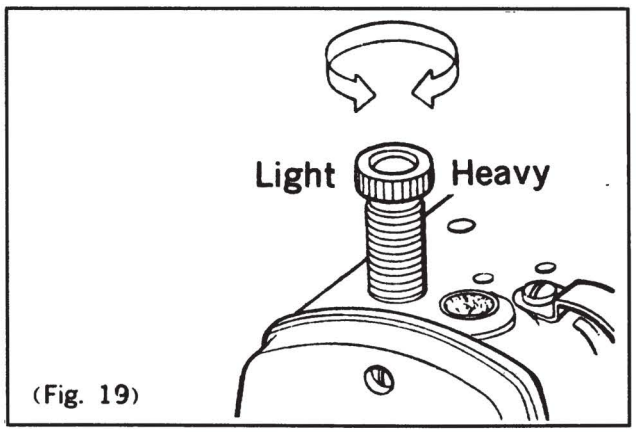

(Fig. 19)

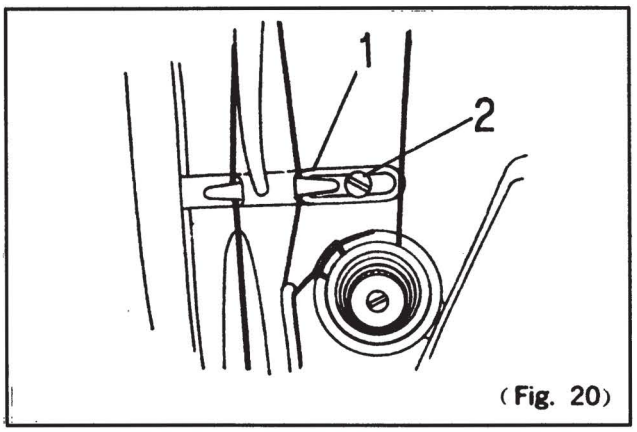

(Fig. 20)

## E.REGULATING MACHINE

1. Loading and unloading rotary hook:

First raise the needle bar in the highest position. Take off the needle plate needle and bobbin. Then loosen the positioning hook screw l of rotary hook (Fig. 21) and take off the Positioning hook 2. Then loosen the three set screw 3.

Turn the balance wheel to raise the feed bar in the highest position (Fig. 22). Then turn the rotary hook in the position of Fig. 22, thus the rotary hook can be easily taken off.



From the library of: Superior Sewing Machine & Supply LLC

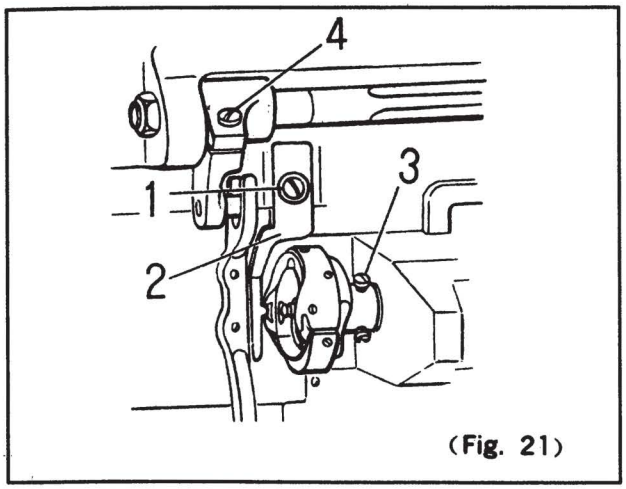

(Fig. 21)

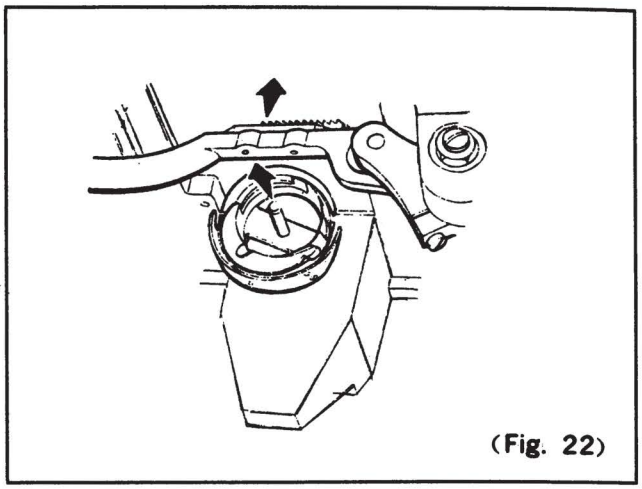
(Fig. 22)

2. Adjustment of rotary hook looping timing:

The moving relationship between rotary hook and needle affects sewing features greatly. The standard rotary hook looping timing is:

After the needle moves down in the lowest position, it then rises to 2.2 mm, at this time:

(1) Looping point of rotary hook should be in line with the mid-line of needle;

(2) Looping point should be 2 mm higher than the hole of needle (Fig.23).

Regulating method:

(1) Loosen the three set screws of rotary hook.

(2) Turn balance wheel to lower the needle in the lowest position and then raise it 2.2 mm

(3) Turn the rotary hook to make the looping point on the position of the mid-line of needle.

(4) Loosen the set screw 1 of needle bar link shaft (Fig. 24).

(5) Regulate the height of needle bar to make the looping point 2 mm higher than the hole of needle.

When regulating rotary hook looping timing, be careful of the side clearance beween looping point and needle.

The gap between the level of looping point and the bottom of needle should be regulated in 0.1 mm (Fig. 25).

3. Regulating feed dogs length:

The top of feed dogs should be 0.6-1 mm higher than the level of needle plate when the feed dogs rise in the highest position. If sewing special heavy or light materials, the gauge of feed dogs should be regulated. When regulating, first loosen the set screw 4 (Fig. 21) of lifting bell crank.



From the library of: Superior Sewing Machine & Supply LLC

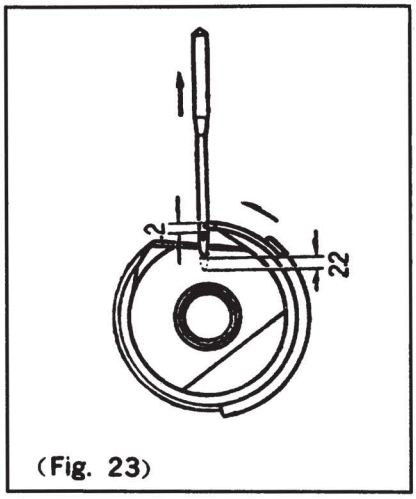

(Fig. 23)

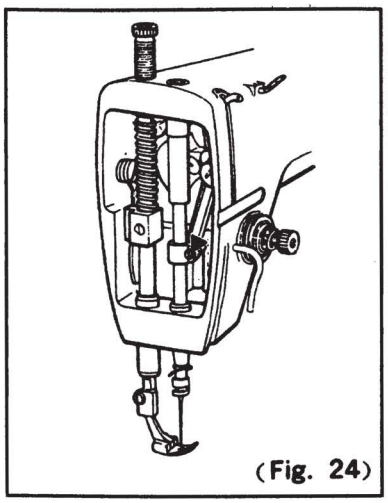
(Fig. 24)

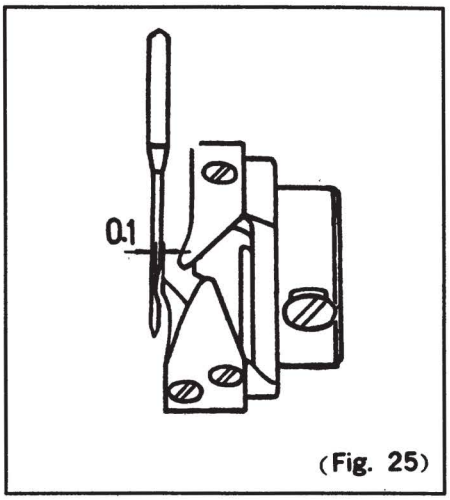

(Fig. 25)



From the library of: Superior Sewing Machine & Supply LLC

## F. TROUBLES DUE TO INCORRECT USE OR ADJUSTMENT OF THE MACHINE

| Fault | Probable cause | Solving method |
|---|---|---|
| Needle breaking | 1. Needle too thin or sewing materials too heavy. | 1. Refer to the part of needle, thread, and sewing materials. |
| | 2. Needle bent. | 2. Change the bent needle. |
| | 3. Needle badly fitted. | 3. Correct needle position. |
| | 4. Strongly pull the sewing materials when sewing. | 4. Properly sewing. |
| Skipped stitches | 1. The side clearence and position between needle and rotary hook badly adjusted. | 1. Regulating as per instruction book. |
| | 2. Needle bent | 2.Change the bent needle. |
| | 3. Needles and materials unfit. Hole on the needle plate too Large. | 3. Refer to the part of needle and to increase return amount of rotary sewing material. Lower the needle a little hook (for light materials). |
| | 4. Weak bobbin thread tension and Presser pressure. | 4. Increase them. |
| Thread breaking | 1. Thread quality. | 1.Use high quality thread. |
| | 2. Needle and thread unfit. | 2. Refer to the part of needle and thread. |
| | 3. Rough surface of thread guide. | 3. Polishing. |
| | 4. Tension too tight. | 4. Loosen the tension nut. |
| | 5. Needle position badly fitted | 5. Regulating it. |
| | 6. High temperature of needle fuses artificial fibre thread. | 6. Cooling needle. |
| | 7. Weak bobbin thread tension. | 7. Regulating it. |
| Thread floating | 1. Rotary hook is bad quality and badly fitted. | 1. Change a new one and increase return amount of rotary hook. |
| | 2. Needle too thin. | 2. Change a thick one |
| | 3. Feed dogs too low. | 3. Raise them. |
| | 4. Weak needle thread tension. | 4. Increase it. |



From the library of: Superior Sewing Machine & Supply LLC

| | | |
|---|---|---|
| | 5. Problem of presser foot. | 5. Narrow the distance between bottom of the presser slot and needle. Change a new presser foot. |
| | 6. Weak take-up spring | 6. Increase it. |
| Twisted stitches | 1. Strong needle thread tension. | 1. Decrease it. |
| | 2. Needle too thin or thick | 2. Properly select. |
| | 3. Needle badly fitted. | 3. Regulating it. |
| | 4. The hole of needle bar thread guide too big. | 4. Use small one. |
| Puckering | 1. Strong needle thread tension and take-up spring. | 1. Decrease them. |
| | 2. Rough needle plate and presser foot. Unproper pressure. | 2. Polishing them and regulating the pressure. |
| | 3. Movement of feed dogs quicker than needle bar. | 3. Regulating it to the standard or slower than needle bar. |
| | 4. Needle too thick. | 4. Use slim one. |
| | 5. Bobbin too heavy. | 5. Decrease its weight or use aluminium bobbin. |
| | 6. Feed dogs too slant or 0.8 mm higher. | 6. The front of feed dogs should be higher, lower the height of feed dogs. |
| | 7.The hole on needle plate too large. | 7. Use small one. |



From the library of: Superior Sewing Machine & Supply LLC

# Illustrated Parts List

## A.Arm components

| Ref.No. | Part.No. | Description | Amt. Req. |
|---|---|---|---|
| 1 | GR044 | Face Plate | 1 |
| 2 | GS35 | Upper screw for face plate | 1 |
| 3 | GS42 | Lower screw for face place | 2 |
| 4 | GR537 | Oil pad for face plate | 2 |
| 5 | GQ12/9 | Arm | 1 |
| 6 | GR165 | Upper oil tube for upright arm shaft | 1 |
| 7 | GR043 | Lower oil tube for upright arm shaft | 1 |
| 8 | GR166 | Lower shaft back bushing oil tube | 1 |
| 9 | GQ15 | Model brand | 1 |
| 10 | GX1 | Rivet | 2 |
| 11 | GR539 | Upright shaft oil pad | 1 |
| 12 | GR537 | Oil pad screw–hole | 2 |
| 13 | GR164 | Oil cup for upper shaft back bushing | 1 |
| 14 | GR164 | Oil cup for upper shaft middle bushing | 1 |
| 15 | GR164 | Oil cup for upper shaft front bushing | 1 |
| 16 | GR164 | Oil cup for lower shaft front bushing | 1 |
| 17 | GR539 | Oil pad for needle bar crank screw hole | 1 |
| 18 | GR015 | Back cover plate | 1 |
| 19 | GS42 | Back cover plate screw | 3 |
| 20 | GR016 | Balance wheel front cover | 1 |
| 21 | GR017 | Balance wheel front cover screw | 2 |
| 22 | GS81 | Cover column | 2 |
| 23 | GS54 | Cover column screw | 2 |
| 24 | GR018 | Balance wheel back cover | 1 |
| 25 | GBS104 | Balance wheel back cover screw | 2 |



From the library of: Superior Sewing Machine & Supply LLC

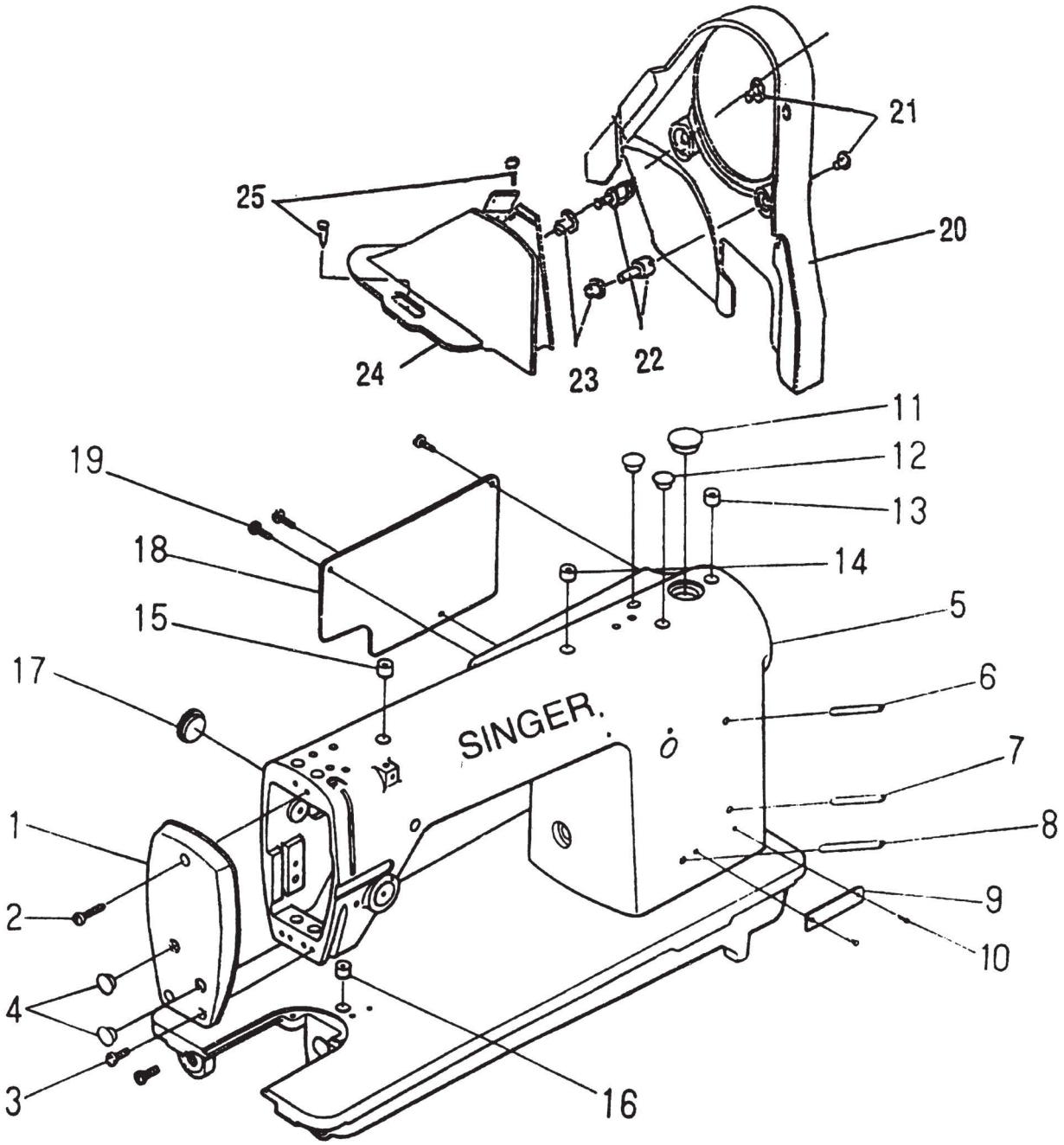




From the library of: Superior Sewing Machine & Supply LLC

# B.Upper shaft, needle bar components

| Ref.No. | Part.No. | Description | Amt. Req. |
|---|---|---|---|
| 1 | GS24 | Set screw for balance wheel | 1 |
| 2 | GP5 | Balance wheel | 1 |
| 3 | GS37 | Balance wheel screw | 2 |
| 4 | GO4 | Upper shaft back bushing | 1 |
| 5 | GS37 | Screw for upper shaft back bushing | 1 |
| 6 | GR124 | Oil felt for upper shaft back bushing | 1 |
| 7 | GR019 | Stop ring for upper shaft middle bushing | 1 |
| 8 | GS50 | Set screw for upper shaft middle bushing stop ring | 2 |
| 9 | GO14 | Upper shaft middle bushing | 1 |
| 10 | GS50 | Set screw for upper shaft middle bushing | 1 |
| 11 | GR124 | Oil felt for upper shaft middle bushing | 1 |
| 12 | GZ18 | Upper shaft | 1 |
| 13 | GO5 | Upper shaft front bushing | 1 |
| 14 | S2 | Set screw for upper shaft front bushing | 1 |
| 15 | GR124 | Oil felt for upper shaft front bushing | 1 |
| 16 | GR89 | Needle bar crank | 1 |
| 17 | GS38 | Set screw for needle bar crank | 1 |
| 18 | GS58 | Set screw for take–up crank | 1 |
| 19 | GS39 | Thumb screw for take–up crank | 1 |
| 20 | GR91/4 | Take–up lever parts | 1 |
| 21 | GR024 | Oil tube for take–up lever | 1 |
| 22 | GR621 | Oil wick for take–up lever | 1 |
| 23 | GR90 | Take–up crank | 1 |
| 24 | GR40 | Set screw for take–up crank | 1 |
| 25 | GX13 | Take–up link lever pin | 1 |
| 26 | GS37 | Screw for take–up link pin | 1 |
| 27 | GR99 | Needle bar oil seal | 1 |
| 28 | GO15 | Needle bar upper sleeve pipe | 1 |
| 29 | GS43 | Screw for needle bar upper sleeve pipe | 1 |
| 30 | GZ11 | Needle bar | 1 |
| 31 | GR97 | Needle bar link column | 1 |
| 32 | GR41 | Screw for needle bar link column | 1 |
| 33 | GO7 | Needle bar lower sleeve pipe | 1 |
| 34 | GS43 | Screw for needle bar lower sleeve pipe | 1 |
| 35 | GR100 | Needle bar upper thread hook | 1 |
| 36 | GR045 | Needle bar lower thread hook | 1 |
| 37 | GS44 | Screw for needle | 1 |
| 38 | N1515-01-#16 | Needle | 1 |
| 39 | GR96 | Needle bar link | 1 |
| 40 | GU1 | Needle bar link column slide disc | 1 |
| 41 | GR020 | Needle bar link column slide guide | 1 |
| 42 | GS42 | Screw for needle bar link column slide guide | 1 |
| 43 | GR024 | Needle bar link oil tube | 1 |
| 44 | GR621 | Need bar link oil wick | 1 |
| 45 | GR021 | Take up lever cover | 1 |
| 46 | GS81 | Screw for take–up lever cover | 1 |
| 47 | GR472 | Left thread hook | 1 |
| 48 | GS26 | Left thread hook screw | 1 |
| 49 | GR471 | Right thread hook | 1 |
| 50 | GS33 | Right thread hook screw | 1 |
| 51 | GR101 | Thread retainer | 1 |
| 52 | GS45 | Thumb screw for thread retainer | 1 |
| 53 | GS104 | Thread tension releasing regulating hook | 1 |
| 54 | GL1 | Thread tension releasing regulating hook screw | 1 |
| 55 | GL10 | Thread tension nut | 1 |
| 56 | GW19 | Thread tension spring | 1 |
| 57 | G57 | Thread tension releasing disc | 1 |
| 58 | GR013 | Thread tension disc | 2 |
| 59 | GS85 | Thread tension screw | 1 |
| 60 | GS83 | Set screw for thread tension screw | 1 |
| 61 | GW18 | Take–up spring | 1 |
| 62 | GR103 | Take–up spring regulator | 1 |
| 63 | GS48 | Take–up spring regulating screw | 1 |
| 64 | GX14 | Thread tension releasing screw | 1 |
| 65 | GX25 | Thread tensioner top lever | 1 |
| 66 | GR1492 | Thread guide pin | 1 |
| 67 | GR1493 | Thread guide tension disc | 2 |
| 68 | GW252 | Thread guide tension spring | 1 |
| 69 | GS017 | Thread guide tension screw | 1 |



From the library of: Superior Sewing Machine & Supply LLC

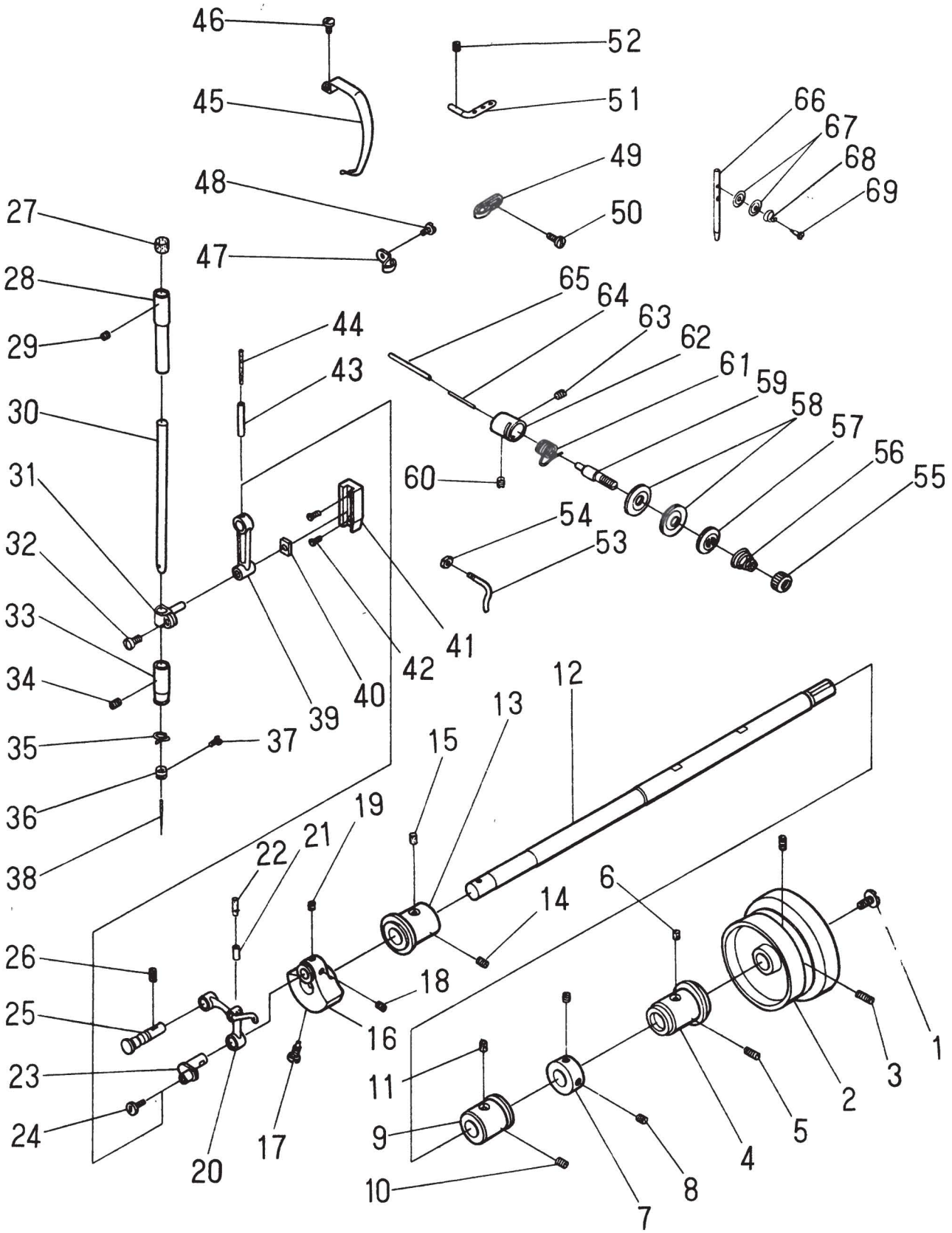




From the library of: Superior Sewing Machine & Supply LLC

## C.Presser lift components

| Ref.No. | Part.No. | Description | Amt. Req. |
|---|---|---|---|
| 1 | GS49 | Pressure regulating screw | 1 |
| 2 | GW34 | Pressure bar spring | 1 |
| 3 | GR031 | Pressure bar guide bracket | 1 |
| 4 | GS50 | Pressure bar guide bracket screw | 1 |
| 5 | GZ12 | Pressure bar | 1 |
| 6 | G08 | Sleeve for pressure bar | 1 |
| 7 | GS43 | Screw for pressure bar sleeve | 1 |
| 8 | GR109 | Movable presser foot crank | 1 |
| 9 | S40 | Movable presser foot screw | 1 |
| 10 | GW30 | Movable presser foot spring | 1 |
| 11 | GR110 | Movable presser foot plate | 1 |
| 12 | GX15 | Movable presser foot pin | 1 |
| 13 | GR030 | Presser foot lever | 1 |
| 14 | GS81 | Presser foot lever screw | 1 |
| 15 | GR029 | Presser lift lever projecting frame | 1 |
| 16 | GR028 | Presser lift lifter | 1 |
| 17 | GS88 | Screw on the lifter | 1 |
| 18 | GL11 | Screw stud for the lifter | 1 |
| 19 | GS69 | Set screw for lifter | 1 |
| 20 | GS027 | Presser lift front lever | 1 |
| 21 | GS69 | Set screw for front lever | 1 |
| 22 | GL11 | Screw stud for front lever | 1 |
| 23 | GS87 | Presser lift pull lever screw | 2 |
| 24 | GR026 | Presser lift pull lever | 1 |
| 25 | GR025 | Presser lift back lever | 1 |
| 26 | GS86 | Back lever screw | 1 |
| 27 | GW33 | Back lever spring | 1 |
| 28 | GS53 | Presser for top lever joining screw | 1 |
| 29 | GR113 | Presser for top lever joint | 1 |
| 30 | GL6 | Presser for top lever nut | 1 |
| 31 | GX26 | Presser for top lever | 1 |
| 32 | GX326/2 | Presser lift top pin | 1 |
| 33 | GO16 | Top pin cover | 1 |
| 34 | GR046 | Top pin cover gasket | 1 |
| 35 | GL12 | Top pin cover nut | 1 |
| 36 | GR033 | Oil disk | 1 |
| 37 | GBS115 | Oil disk round screw | 6 |
| 38 | GKR10 | Holder | 2 |
| 39 | GBS109 | Holder screw | 4 |
| 40 | GZ20 | Knee lifter shaft | 1 |
| 41 | GX219 | Knee lifter pin | 1 |
| 42 | GW35 | Knee lifter spring | 1 |
| 43 | GR1130 | Presser lift joint | 1 |
| 44 | GS292 | Presser lift joint screw | 1 |
| 45 | GS292 | Presser lift operating lever screw | 1 |
| 46 | GR034 | Presser lift crank | 1 |
| 47 | GS290 | Presser lift crank screw | 1 |
| 48 | GR1129 | Direction–limited joint | 1 |
| 49 | GS292 | Direction–limited joint screw | 1 |
| 50 | GKZ2 | Presser lift operating lever | 1 |
| 51 | GKR14 | Operating plate | 1 |
| 52 | GKR13 | Operating platepad | 1 |
| 53 | GKS103 | Operating plate positioner screw | 1 |
| 54 | GKR15 | Operating plate positioner | 1 |
| 55 | GKL102 | Operating plate position nut | 1 |



From the library of: Superior Sewing Machine & Supply LLC

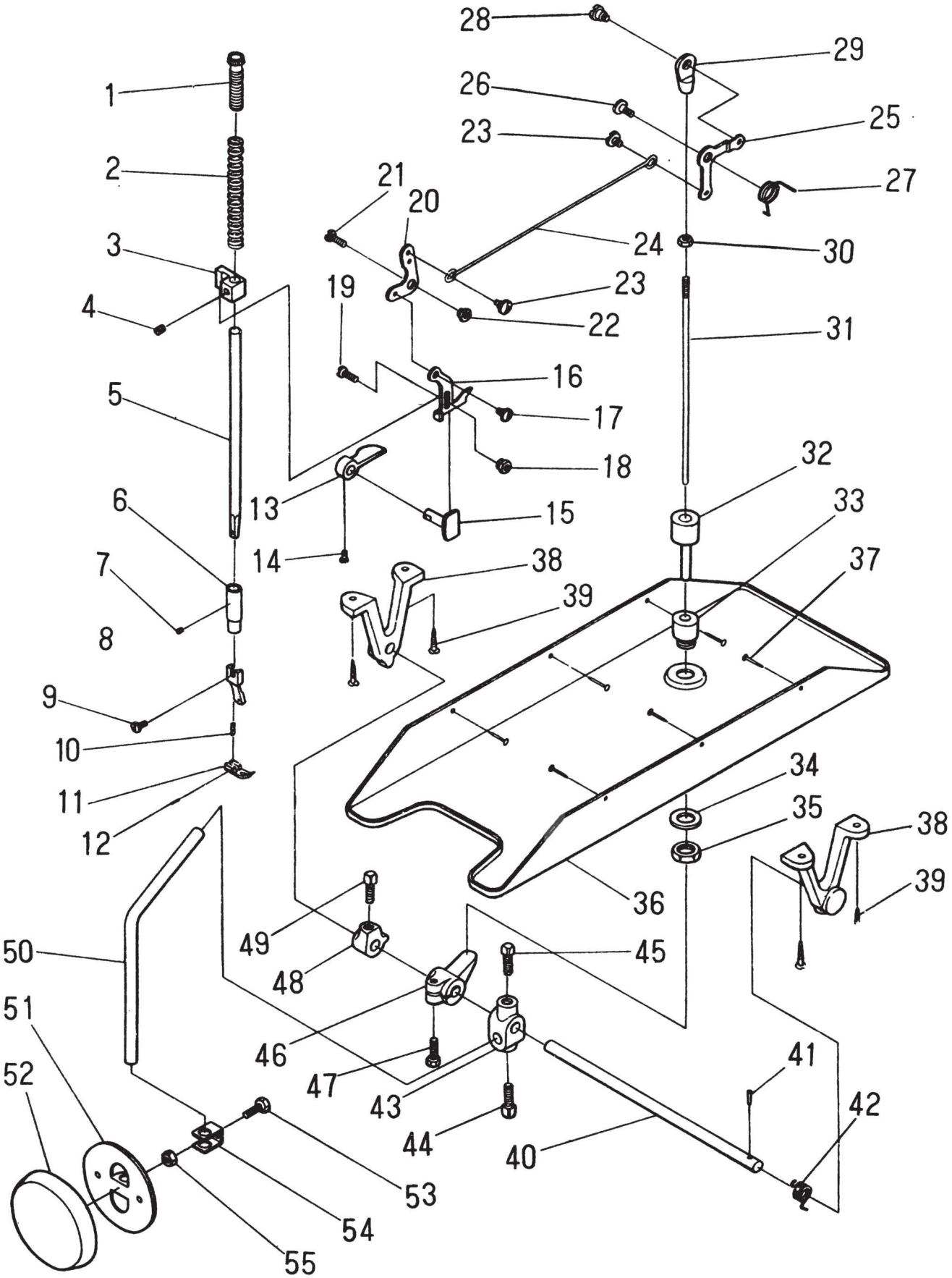




From the library of: Superior Sewing Machine & Supply LLC

## D.Lower shaft, rotary hook components

| Ref.No. | Part. No. | Description | Amt. Req. |
|---|---|---|---|
| 1 | GR131 | Upper shaft bevel gear main cover | 1 |
| 2 | GR132 | Upper shaft bevel gear assistant cover | 1 |
| 3 | GS82 | Upper shaft bevel gear cover screw | 1 |
| 4 | GC4 | Upper shaft bevel gear | 1 |
| 5 | GS39 | Upper shaft bevel gear screw | 1 |
| 6 | GC3 | Stand shaft upper bevel gear | 2 |
| 7 | GS58 | Stand shaft upper bevel gear screw | 2 |
| 8 | GO9 | Stand shaft upper bushing | 2 |
| 9 | GS37 | Stand shaft upper bushing screw | 1 |
| 10 | GR123 | Stand shaft upper bushing oil felt | 1 |
| 11 | GZ14 | Stand shaft | 1 |
| 12 | GO10 | Stand shaft lower bushing | 1 |
| 13 | GS37 | Stand shaft lower bushing screw | 1 |
| 14 | GR123 | Stand shaft lower bushing oil felt | 1 |
| 15 | GC2 | Stand shaft lower bevel gear | 1 |
| 16 | GS39 | Stand shaft lower bevel gear screw | 2 |
| 17 | GR127 | Lower shaft bevel gear main cover | 1 |
| 18 | GR128 | Lower shaft bevel gear assistant cover | 1 |
| 19 | GS82 | Lower shaft bevel gear cover screw | 1 |
| 20 | GZ13 | Lower shaft | 1 |
| 21 | GC1 | Lower shaft bevel gear | 1 |
| 22 | GS39 | Lower shaft bevel gear screw | 2 |
| 23 | GO10 | Lower shaft back bushing | 1 |
| 24 | GS37 | Lower shaft back bushing screw | 1 |
| 25 | GR123 | Lower shaft back bushing oil felt | 1 |
| 26 | GR035 | Lower shaft back bushing gasket | 1 |
| 27 | GS39 | Lower shaft back bushing gasket screw | 1 |
| 28 | GO9 | Lower shaft front bushing | 1 |
| 29 | GS37 | Lower shaft front bushing screw | 1 |
| 30 | GR123 | Lower shaft front bushing oil felt | 1 |
| 31 | GR121 | Rotary hook directional hook | 1 |
| 32 | GR122 | Rotary hook directional hook gasket | 1 |
| 33 | GS55 | Rotary hook directional hook screw | 1 |
| 34 | GR118/14 | Rotary hook | 1 |
| 35 | GR184 | Rotary hook cover | 1 |
| 36 | GS73 | Rotary hook cover screw | 1 |
| 37 | GR013 | Rotary hook cover oil felt | 1 |
| 38 | GR187 | Rotary hook guard | 1 |
| 39 | GS75 | Rotary hook guard screw | 4 |
| 40 | GR185 | Rotary hook holder | 1 |
| 41 | GR186 | Rotary hook plate | 1 |
| 42 | GS74 | Rotary hook plate screw | 3 |
| 43 | GR120 | Bobbin | 1 |
| 44 | GR119/9 | Shuttle | 1 |
| 45 | GR188 | Bobbin case | 1 |
| 46 | GW32 | Shuttle spring | 1 |
| 47 | GS78 | Shuttle spring regulating screw | 1 |
| 48 | GS77 | Shuttle spring setting screw | 1 |
| 49 | GR189 | Shuttle bobbin case latch | 1 |
| 50 | GW31 | Shuttle bobbin case latch spring | 1 |
| 51 | Gr190 | Shuttle cover | 1 |



From the library of: Superior Sewing Machine & Supply LLC

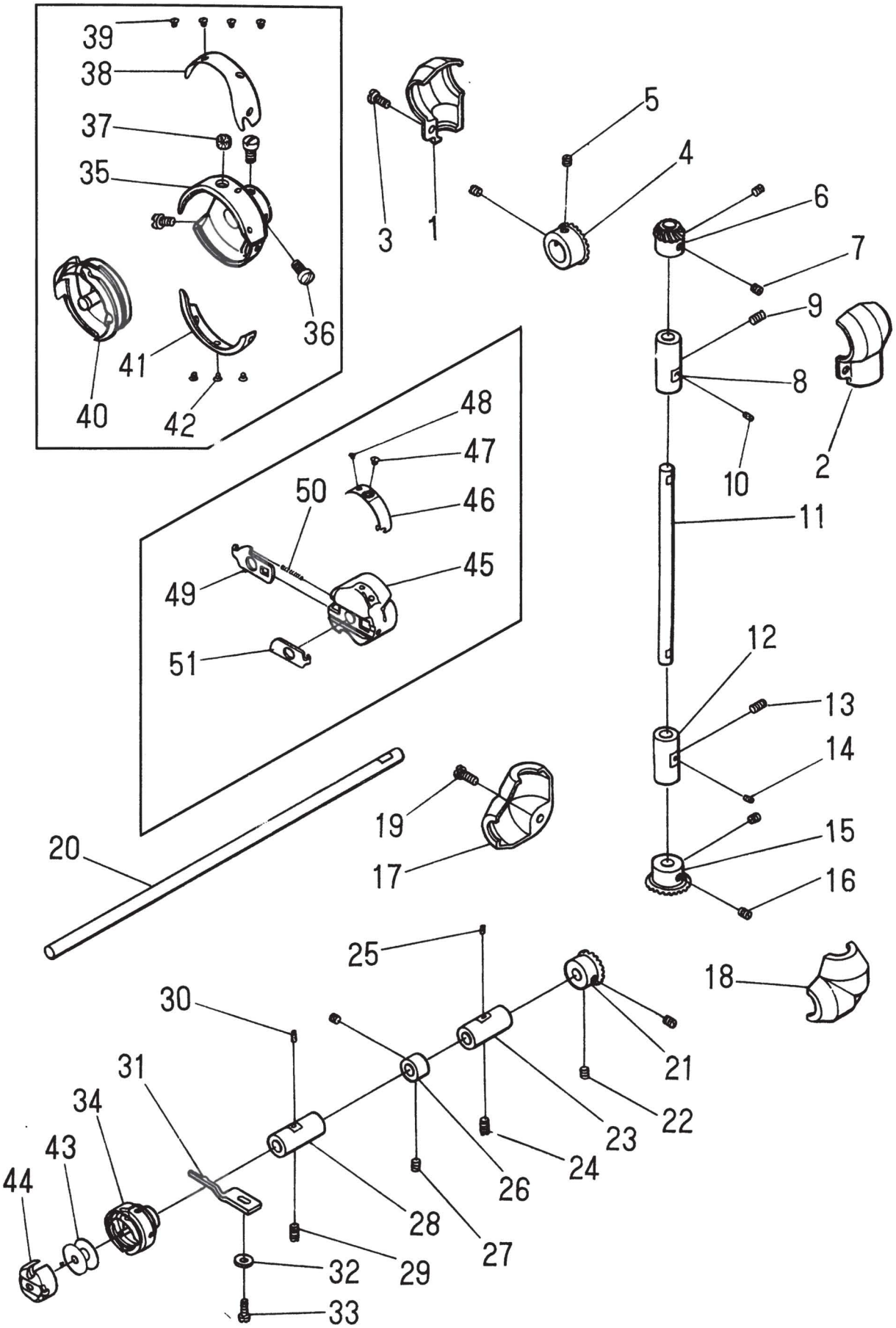




From the library of: Superior Sewing Machine & Supply LLC

## E.Feeding, Lifting bell components

| Ref.No. | Part.No. | Description | Amt. Req. |
|---|---|---|---|
| 1 | GT3 | Feeding and lifting bell eccentric | 1 |
| 2 | S19 | Eccentric screw | 1 |
| 3 | GR133 | Eccentric ring | 1 |
| 4 | GR134 | Eccentric ring oil felt | 1 |
| 5 | GW24 | Oil felt spring | 1 |
| 6 | GR036 | Forked feed bar | 1 |
| 7 | GS59 | Feed crank taper screw | 1 |
| 8 | GL7 | Feed crank taper screw nut | 1 |
| 9 | GR142 | Feed shaft crank | 1 |
| 10 | GS55 | Feed shaft crank screw | 1 |
| 11 | GR014 | Feed shaft wick | 2 |
| 12 | GL8 | Large top nut | 2 |
| 13 | GS64 | Feed shaft top nut | 2 |
| 14 | GR143 | Feed shaft | 1 |
| 15 | GS65 | Small top screw | 2 |
| 16 | GL9 | Small top nut | 2 |
| 17 | GR144 | Feed bar | 1 |
| 18 | GR145 | Feed dog | 1 |
| 19 | GS66 | Feed dog screw | 2 |
| 20 | S47 | Needle plate screw | 2 |
| 21 | GR146 | Needle plate | 1 |
| 22 | GR147 | Pushing plate | 1 |
| 23 | GW27 | Pushing plate spring | 1 |
| 24 | GS68 | Pushing plate spring screw | 2 |
| 25 | GR136 | Needle gauge link lever | 1 |
| 26 | GS59 | Small tape screw | 1 |
| 27 | GL7 | Small taper nut | 1 |
| 28 | GX18 | Needle gauge link pin | 1 |
| 29 | GR5279 | Needle gauge regulator | 1 |
| 30 | GS61 | Needle gauge link pin screw | 1 |
| 31 | GX1032 | Needle gauge regulator pin | 1 |
| 32 | S2 | Needle gauge regulator pin screw | 1 |
| 33 | GS89 | Needle gauge regulator screw | 1 |
| 34 | GS046 | Needle gauge plate screw | 1 |
| 35 | GR1536/3 | Needle gauge plate | 1 |
| 36 | GX28 | Lock pin | 1 |
| 37 | GW22 | Lock pin spring | 1 |
| 38 | GR041 | Back feed bar lever | 1 |
| 39 | GS55 | Back feed bar lever screw | 1 |
| 40 | GZ21 | Back feed bar shaft | 1 |
| 41 | GR039/3 | Back feed bar | 1 |
| 42 | S2 | Back feed bar screw | 1 |
| 43 | GW26 | Back feed bar spring | 1 |
| 44 | GR149 | Lifting bell crank link cover | 1 |
| 45 | GR150 | Lifting bell crank link stem | 1 |
| 46 | GS69 | Lifting bell crank link screw | 2 |
| 47 | GR151 | Lifting bell crank link oil felt | 1 |
| 48 | GW28 | Lifting bell crank link oil felt spring | 1 |
| 49 | GS59 | Lifting bell crank link taper screw | 1 |
| 50 | GL7 | Lifting bell crank link taper screw nut | 1 |
| 51 | GS64 | Lifting bell shaft top screw | 2 |
| 52 | GL8 | Lifting bell shaft top nut | 2 |
| 53 | GR014 | Lifting bell shaft wick | 1 |
| 54 | GS152 | Lifting bell shaft | 1 |
| 55 | GR153/4 | Lifting bell crank | 1 |
| 56 | GS55 | Lifting bell crank screw | 1 |
| 57 | GR776 | Wick | 1 |
| 58 | GR042 | Lifting bell feed oil tank | 2 |
| 59 | GS211 | Oil tank screw | 1 |
| 60 | Gl113 | Oil tank nut | 1 |



From the library of: Superior Sewing Machine & Supply LLC

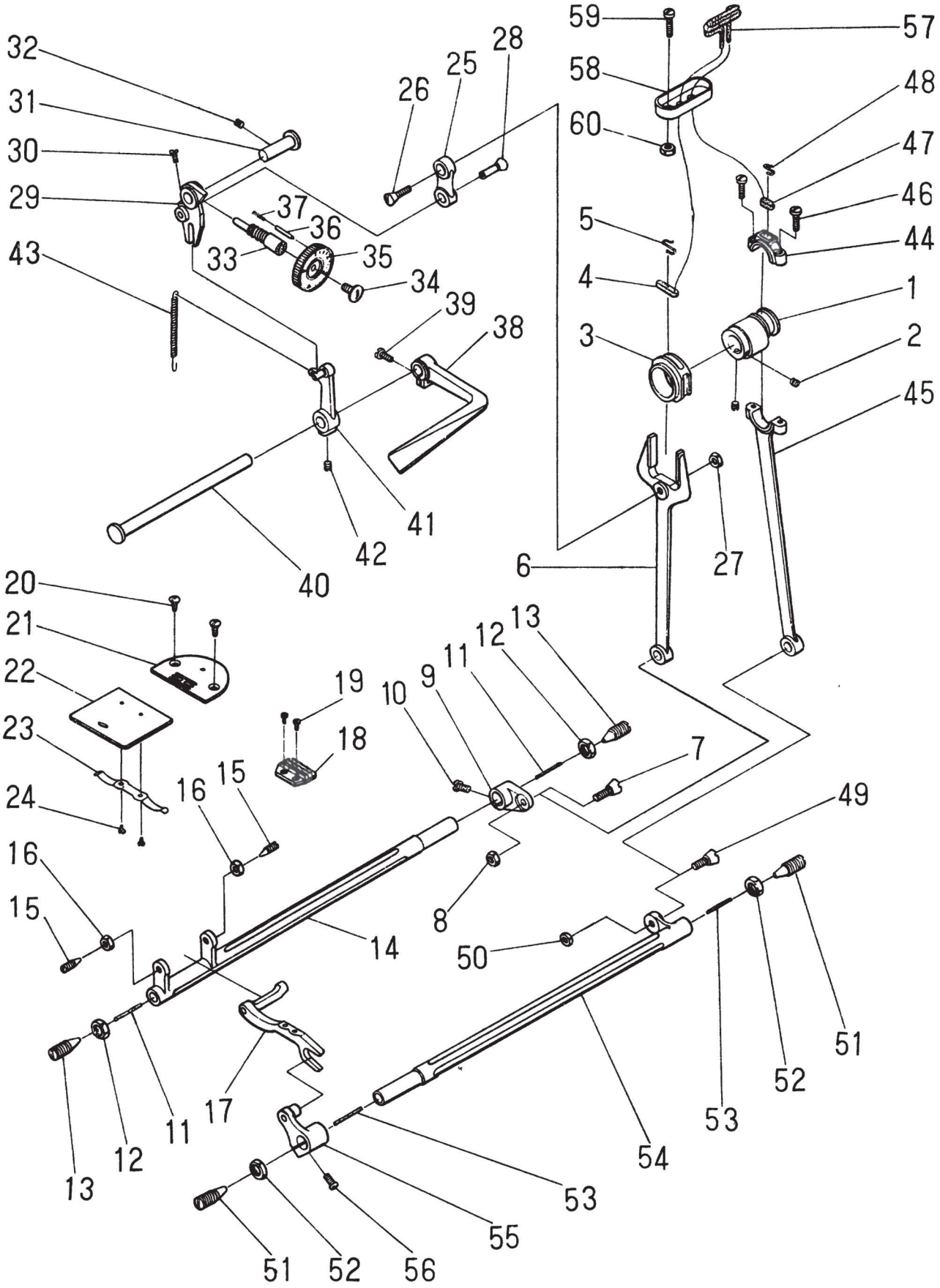




From the library of: Superior Sewing Machine & Supply LLC

## F.Thread winder, thread stand components

| Ref.No. | Part.No. | Description | Amt. Req. |
|---|---|---|---|
| 1 | GBS104 | Winder screw | 2 |
| 2 | GR1166 | Winder base | 1 |
| 3 | GX120 | Winding stand pin | 1 |
| 4 | GX119 | Pin of full thread plate | 1 |
| 5 | GR273 | Ring for winding stand pin | 1 |
| 6 | GR273 | Ring for full thread plate pin | 1 |
| 7 | GS137 | Winding lock clamp screw | 1 |
| 8 | GR228 | Winding lock clamp | 1 |
| 9 | GR201 | Winding lock mat | 1 |
| 10 | GS286 | Full thread plate screw | 1 |
| 11 | GW184 | Full thread plate spring | 1 |
| 12 | GR862 | Full thread plate | 1 |
| 13 | GW114 | Winding stand spring | 1 |
| 14 | GZ224 | Winding shaft | 1 |
| 15 | GR226 | Winding stand | 1 |
| 16 | GP121/2 | Winding wheel | 1 |
| 17 | GS134 | Winding wheel screw | 1 |
| 18 | GL103 | Thread guide tension nut | 1 |
| 19 | W12 | Thread guide tension spring | 1 |
| 20 | GR013 | Thread guide tension plate | 2 |
| 21 | GR1162/2 | Thread guide stand | 1 |
| 22 | GR122 | Thread guide stand washer | 1 |
| 23 | GS118 | Thread guide stand screw | 1 |
| 24 | GZ234 | Thread stand lever lower node | 1 |
| 25 | GR1243 | Thread stand lever lower node washer | 2 |
| 26 | GL141 | Thread stand lever lower node nut | 1 |
| 27 | GZ233 | Thread stand lever upper node | 1 |
| 28 | GKL101 | Thread stand lever upper node nut | 3 |
| 29 | GKR122 | Thread stand lever upper node washer | 2 |
| 30 | GR1211 | Double–hole plate stand | 1 |
| 31 | GS476 | Double–hole plate stand set screw | 1 |
| 32 | GR1212 | Double–hole thread guide | 1 |
| 33 | GR1215 | Thread bobbin anti–loosen mat | 2 |
| 34 | GS477 | Thread plate screw | 2 |
| 35 | GKR124 | Thread plate screw washer | 4 |
| 36 | GR1811 | Thread plate | 2 |
| 37 | GR1214 | Thread plate screw spring washer | 4 |
| 38 | Gl107 | Thread plate screw nut | 2 |



From the library of: Superior Sewing Machine & Supply LLC

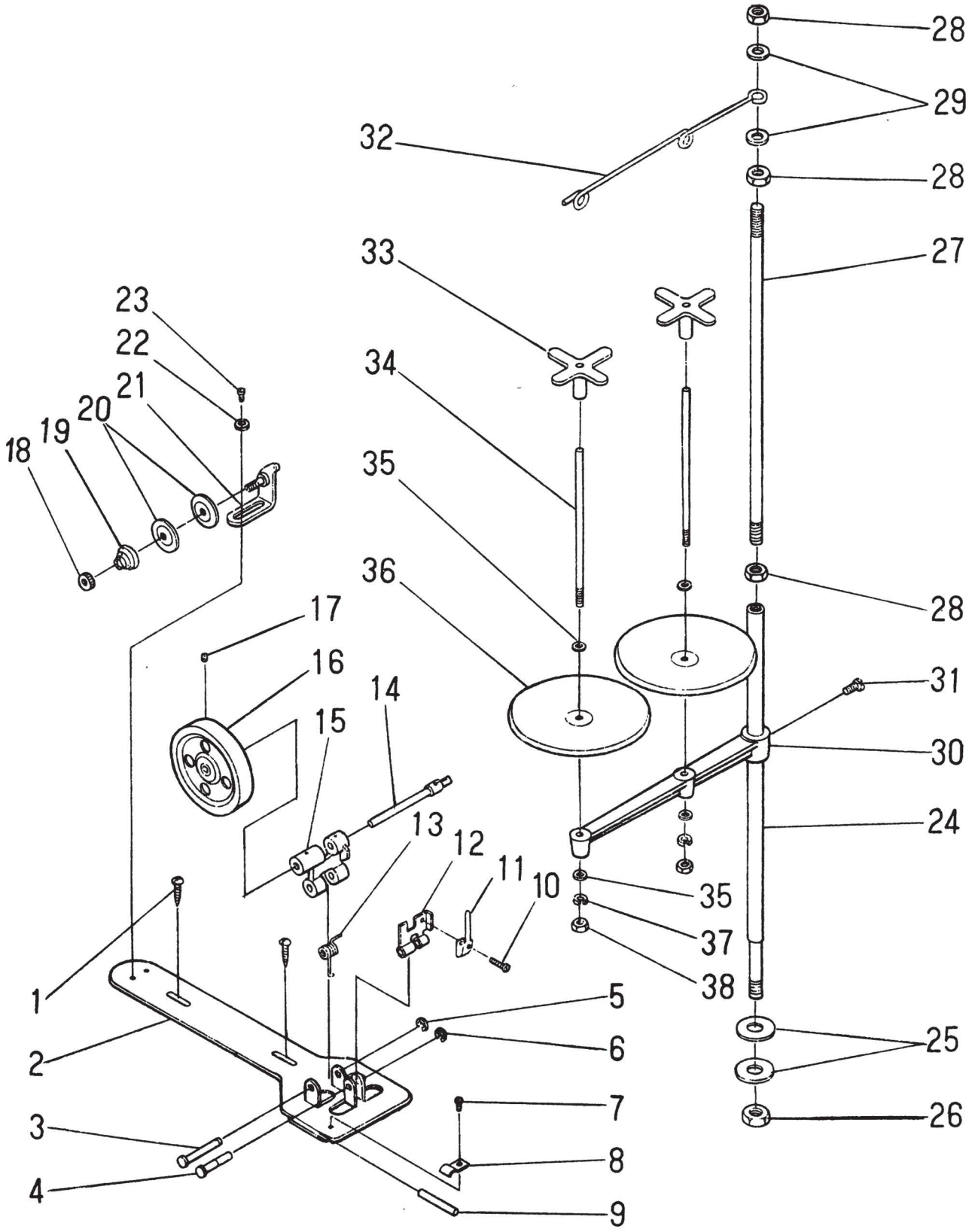




From the library of: Superior Sewing Machine & Supply LLC

## G.Sewing, plate electrical equipment, components

| Ref.No. | Part.No. | Description | Amt. Req. |
|---|---|---|---|
| 1 | GBR108 | Table | 1 |
| 2 | GBR105 | Drawer | 1 |
| 3 | GBR106 | Drawer guide rail | 2 |
| 4 | GBS102 | Drawer guide rail screw | 4 |
| 5 | GD227 | Power switch | 1 |
| 6 | GBS104 | Power switch screw | 2 |
| 7 | GD108 | Power wiring | 1 |
| 8 | GD219 | Power wiring plug | 1 |
| 9 | | Electrical motor tape wheel set nut | 1 |
| 10 | | Electrical motor tape wheel spring washer | 1 |
| 11 | | Electrical motor tape wheel washer | 1 |
| 12 | GD113 | Electrical motor tape wheel | 1 |
| 13 | GE104 | Machine head driven tape (model O. No.100) | 1 |
| 14 | GD220 | 370/2800 right tape wheel clutch electric motor | 1 |
| 15 | GKR209 | Electrical motor plate screw washer | 3 |
| 16 | GKR106 | Electrical motor plate screw spring washer | 3 |
| 17 | GKL101 | Electrical motor plate screw nut | 3 |
| 18 | GKS122 | Electrical motor plate connecting screw | 3 |
| 19 | GBR111/2 | Machine head column | 1 |
| 20 | GBR110 | Machine head connecting hook | 2 |
| 21 | GBX101 | Machine head connecting hook holder pin | 2 |
| 22 | GBR130 | Machine head connecting hook holder | 2 |
| 23 | GBS112 | Machine head mat screw | 2 |
| 24 | GBR112 | Machine head mat (s) | 2 |
| 25 | GBR131 | Machine head mat | 2 |



From the library of: Superior Sewing Machine & Supply LLC

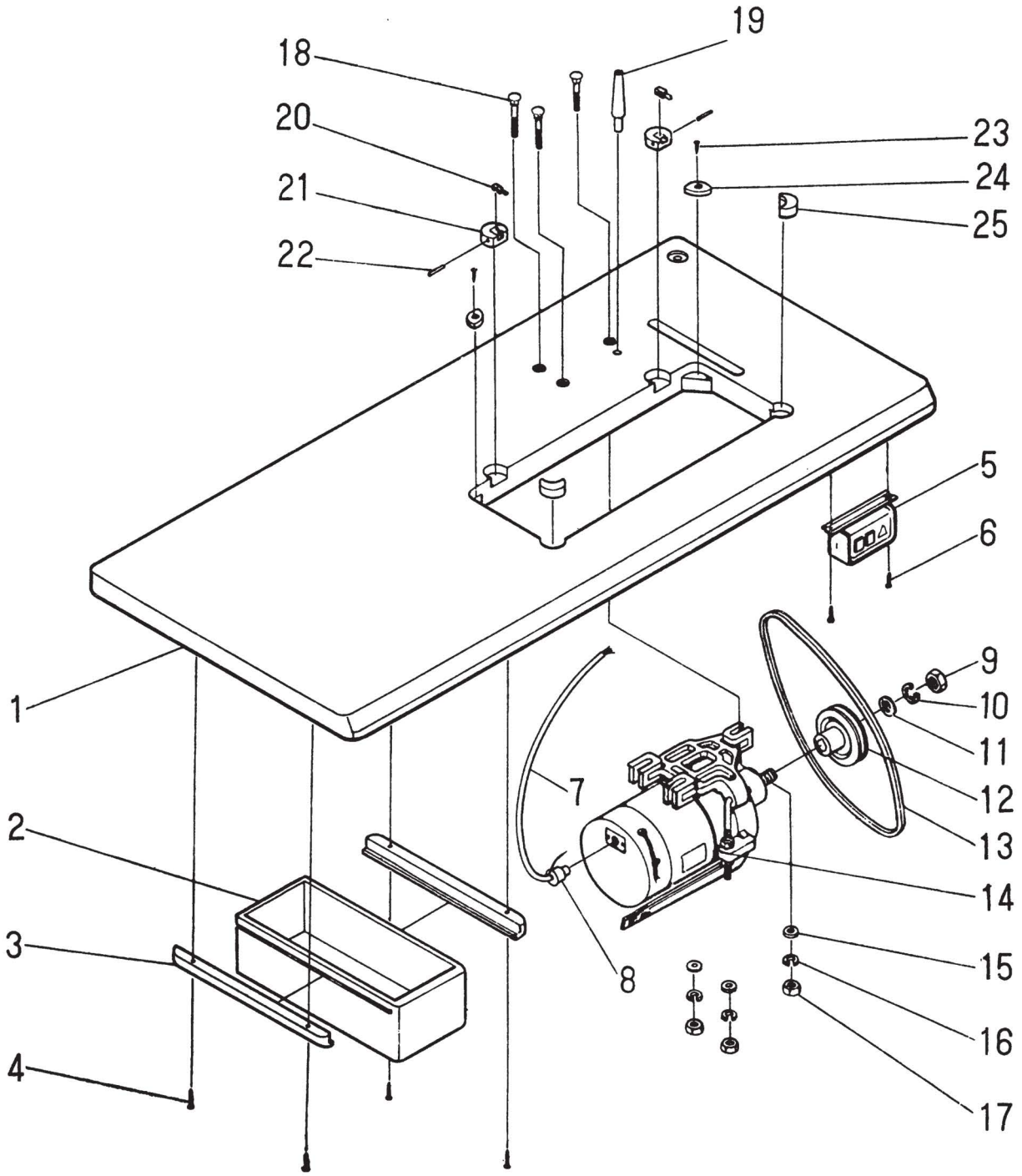




From the library of: Superior Sewing Machine & Supply LLC

## F. Machine stand components

| Ref.No. | Part.No. | Description | Amt. Req. |
|---|---|---|---|
| 1 | GKR193/5 | Stand side asm. | 2 |
| 2 | GKR194 | Rubber cushion | 4 |
| 3 | GKL104 | Nut | 4 |
| 4 | GKR196/2 | Screw | 4 |
| 5 | GKR198 | Space ring | 4 |
| 6 | GKR173/3 | Stand side support asm. | 1 |
| 7 | GKS119 | Screw | 4 |
| 8 | GKR176 | Spring washer | 4 |
| 9 | GR253 | Washer | 4 |
| 10 | GKR178/3 | Treadle brace asm. | 1 |
| 11 | GKS110 | Screw | 2 |
| 12 | GLR122 | Washer | 2 |
| 13 | GLT106 | Spring washer | 2 |
| 14 | GKR181 | Treadle brace lock nut plate | 2 |
| 15 | GKX106 | Treadle shaft | 1 |
| 16 | GKR184 | Treadle bracket | 2 |
| 17 | GLS110 | Screw | 2 |
| 18 | GLR122 | Washer | 4 |
| 19 | GLR106 | Spring washer | 2 |
| 20 | GKL101 | Nut | 2 |
| 21 | GKR182 | Treadle | 1 |
| 22 | GKR111 | Treadle pitman | 1 |
| 23 | GLS102 | Screw | 2 |
| 24 | GKR112 | Washer | 2 |
| 25 | GKL102 | Nut | 2 |
| 26 | GKT116 | Pitman rod, Lower | 1 |
| 27 | GKR118 | Pitman rod, upper | 1 |
| 28 | GKR183 | Joint | 1 |
| 29 | GKS110 | Joint screw | 1 |
| 30 | GKL101 | Joint nut | 1 |
| 31 | GLX101 | Pitman rod split pin(upper) | 1 |
| 32 | GBS114 | Table wood screw | 4 |
| 33 | GLR112 | Table wood screw washer | 4 |
| 34 | GLR186 | Table washer | 4 |



From the library of: Superior Sewing Machine & Supply LLC

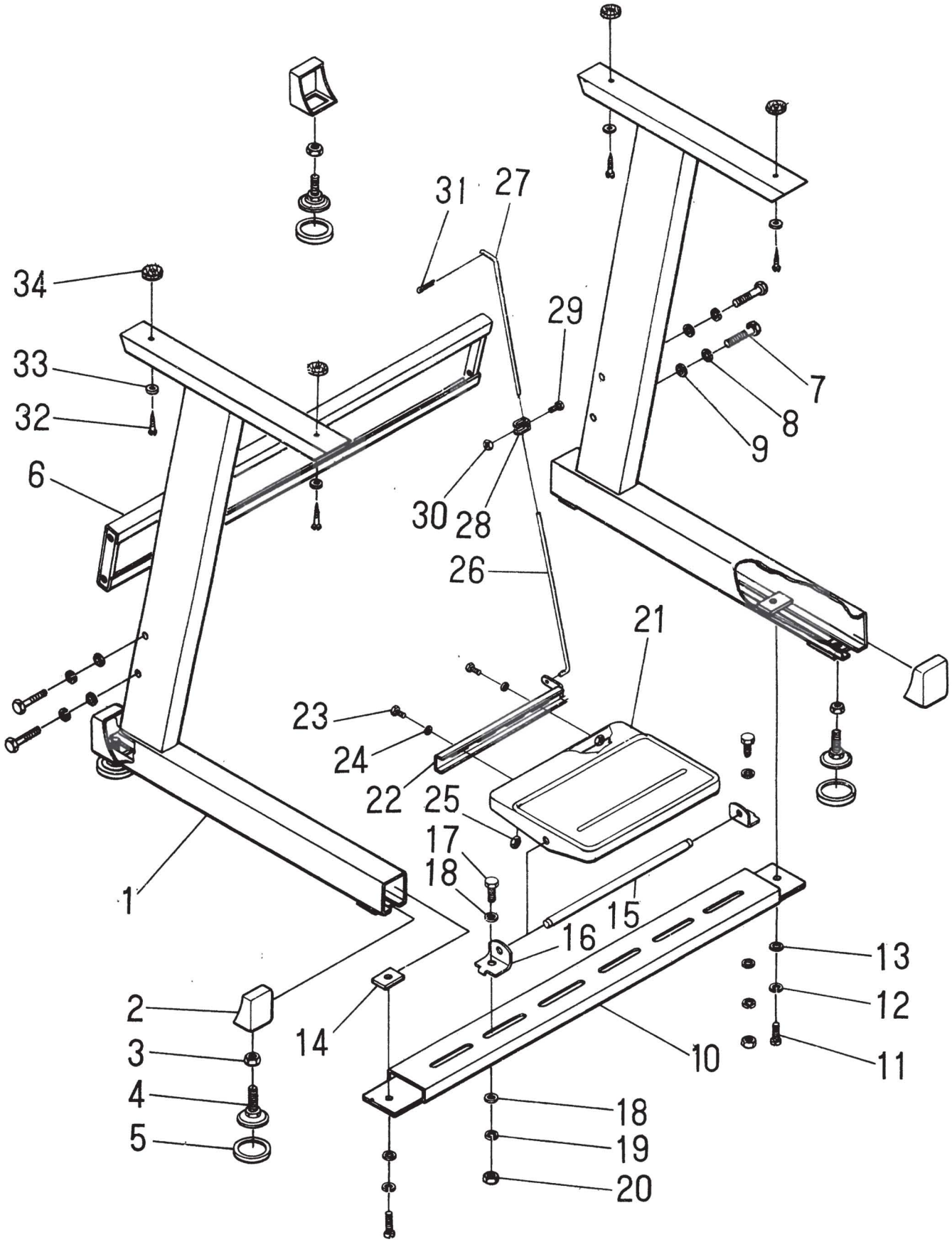




From the library of: Superior Sewing Machine & Supply LLC

From the library of: Superior Sewing Machine & Supply LLC

From the library of: Superior Sewing Machine & Supply LLC

From the library of: Superior Sewing Machine & Supply LLC